Fluid Power

Control every move

Sensors for hydraulic power packs

Barksdale
CONTROL PRODUCTS
CRANE
Barksdale, Inc./Barksdale GmbH
A Subsidiary of Crane Co.

Barksdale –
State-of-the-Art Solutions

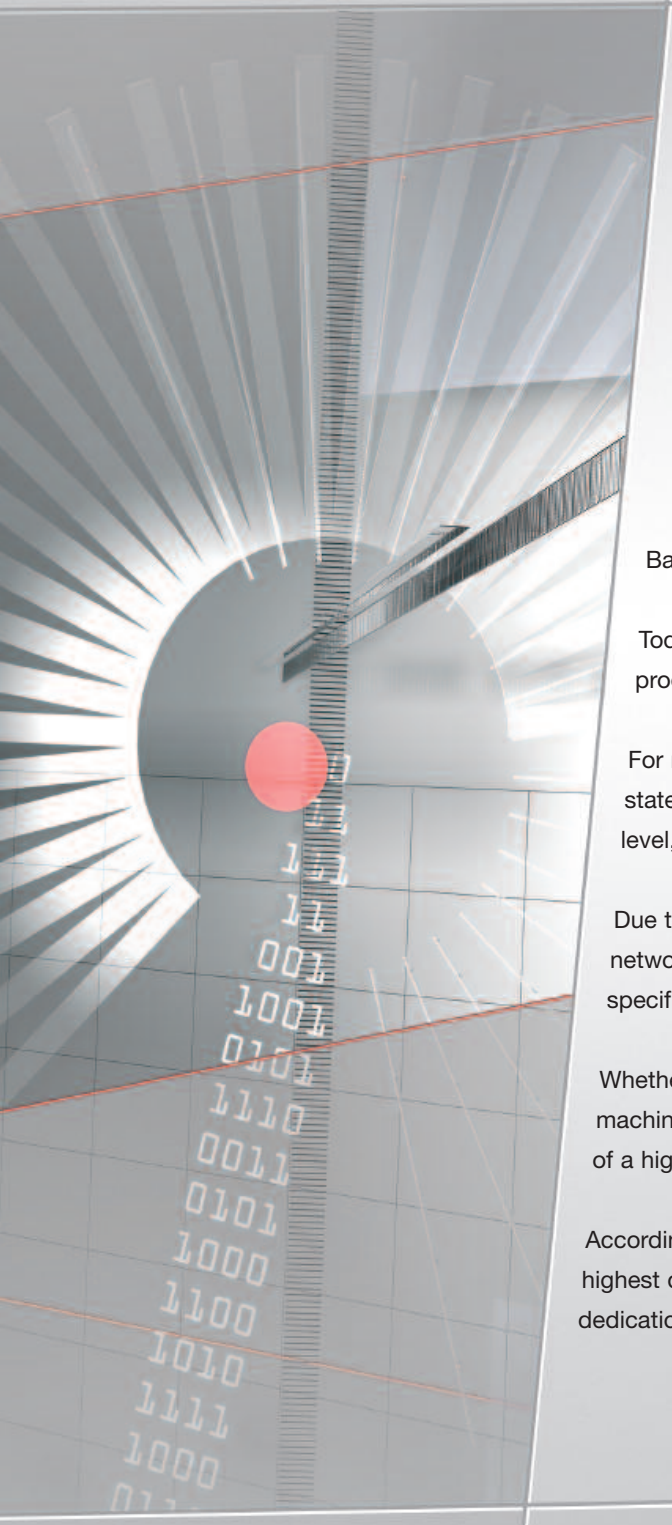

Barksdale – State-of-the-Art Solutions

Today's markets demand flexible and dynamic suppliers of innovative products, efficient management and comprehensive customer service.

For more than 50 years Barksdale has been developing and distributing state-of-the-art solutions for the mechanical and electronic control of pressure, level, flow and temperature.

Due to the knowledge of our customers' requirements and the global distribution network we are able to develop new products or customize products to meet specific application parameters while using standard components.

Whether in mobile or stationary hydraulics or in mechanical engineering and machine tools, oil and gas exploration or in shipbuilding, Barksdale takes care of a high safety standard in many markets.

According to our motto "Control every move" we guarantee our customers the highest degree of satisfaction. With our experience, the know-how and the personal dedication we also realize your wishes and requirements.

Contents

Mechanical Pressure Switches

Compact Pressure Switches Type Series 9000 4

Compact-Pressures Switches Type Series 8000 6

Electronic Pressure Switches

Type UDS1V2 8

Type Switch 2000 10

Electronic Pressure Transducer

Type UPA5 12

Level Switches

Type UNS1000-BN18 14

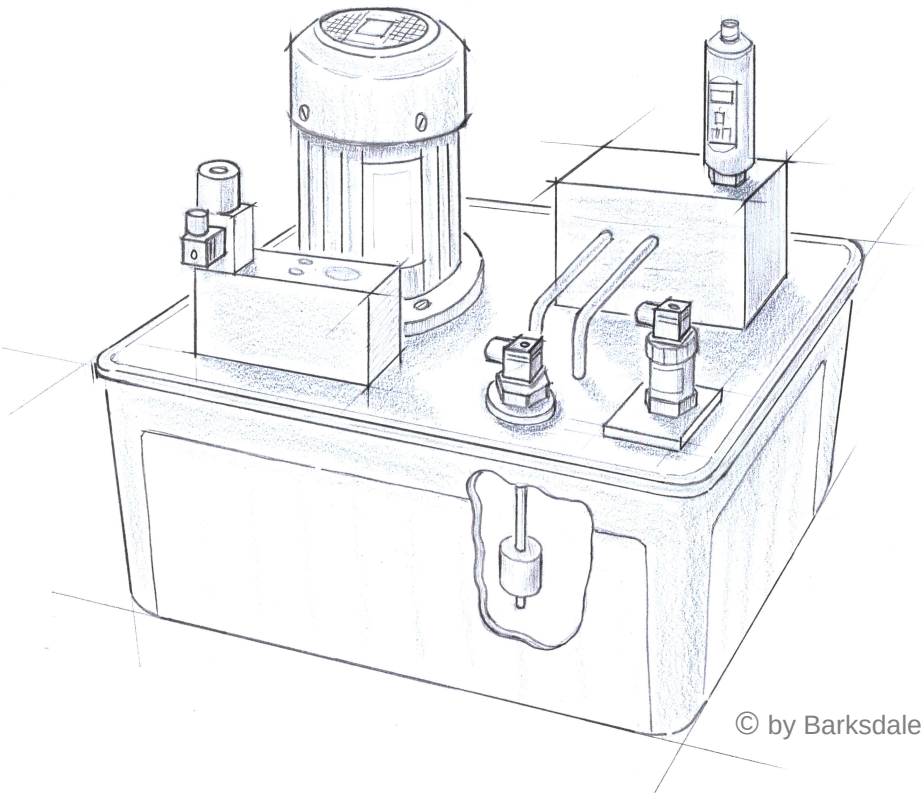

© by Barksdale

Mechanical pressure switch in piston design with 30 x 30 x 92 mm front face and precise switching point setting

Features

high-quality materials,
100% functional test,
compact design,
long pressure spring (precisely adjustable),
G1/4" female thread

Adjustment range

10 ... 400 bar

Applications

OEM applications,
mobile and industrial hydraulics,
test bed and apparatus engineering,
heavy industry,
shipbuilding

Technical Data

Wetted parts:	sealing: PFTE/FKM fitting: AlMg4,5Mn piston: steel (100Cr6)
Repeatability:	±2% (typically)
Switching rate:	max. 60/min.
Temperature range: storage: piston switch:	 -40 °C ... +80 °C (-40 °F ... +176 °F) -20 °C ... +80 °C (-4 °F ... +176 °F)
Protection class:	IP65
Material: housing: electrical plug: adjustment screw:	 AlMg4,5Mn Polyamid (PA) Stainless Steel (1.4305)

Process connection:	G1/4" female thread DIN ISO 228-1
Electrical connection:	EN 175301-8013-A plug (formerly DIN 43650)
Weight:	175 g (0.39 lbs)
Micro switch:	(SPDT) silver contacts
Approvals: **(in preparation)**	GL, Ex ia, others on request

Pressure ranges

Pressure range code [bar]	Adjustment range		Max. hysteresis at full range max %	Max. operating pressure [bar]	Proof pressure [bar]
	Decreasing press. [bar]	Increasing press. [bar]			
1	6 ... 44	10 ... 50	10 %	250	300
2	15 ... 185	20 ... 200		250	300
3	35 ... 360	40 ... 400		500	600

Index: ---

Subject to technical changes.

Index: ---

Dimensions (in mm/*inch*)

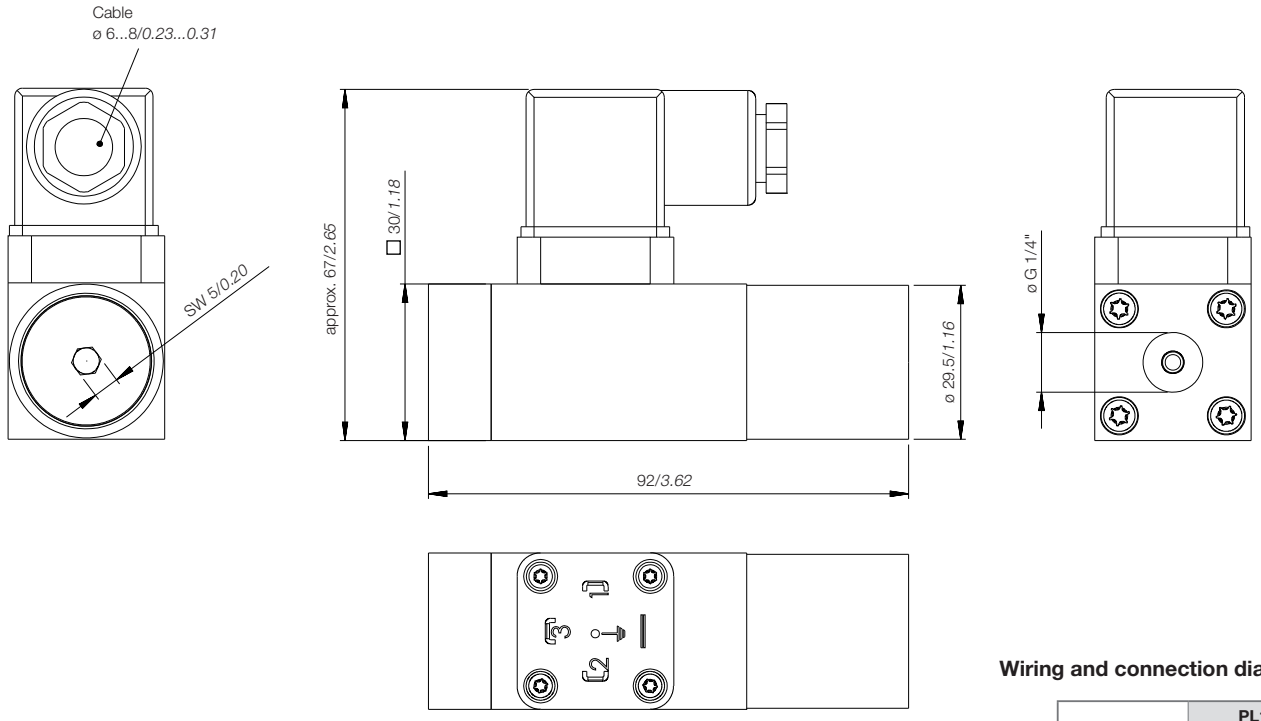

Wiring and connection diagram

	PL1
C	1
NC	2
NO	3
PE	---

Electrical ratings

Micro switch	Special features	Volt AC 50/60 Hz	Ind. Load A	Res. Load A	Volt DC	Ind. Load A	Res. Load A	Minimum capacitance	Intrinsic safety Ex ia
1	Silver contacts	250 V~	2.5	10.0	24 V=	1.0	6.0	20 mA at 24 VDC	Umax = 28 V Imax = 50 mA

Seal

	Seal
V	FKM

Approvals

EXI	Ex ia
GL	Germanischer Lloyd

Subject to technical changes.

Ordering

Example for order number

Type	Process connection	Pressure range	Micro switch Contact		Electrical connection		Seal		Approvals
9	2	2	1	–	PL1	–	V	–	GL

Your order number

9	2		1	–	PL1	–	V	–	

Series 8000 - mechanical pressure switches in diaphragm or piston design. The successors of the product lines XTM, XTK, X1T and 96200 have the additional advantage of very low and precise switching point settings.

Features

Modular construction,
Versatile,
High-quality materials,
100% assays,
Long pressure spring

Adjustment ranges

0.6...600 bar

Applications

OEM applications,
Mobile- and industrial-hydraulics and pneumatics,
Test bed and apparatus engineering,
Heavy industry

Technical Data

Wetted parts: standard: optional:	 NBR, PTFE with bronze and stainless steel 1.4301; pistons: steel FKM, EPDM, CR instead of NBR
Repeatability:	±1% type, piston pressure switch ±2% type, diaphragm pressure switch
Switching rate:	max. 60/min piston pressure switch max. 30/min diaphragm pressure switch
Temperature range: Piston switch: Diaphragm switch:	 -40 °C ... +80 °C (-40 °F ... +176 °F) -20 °C ... +80 °C (-4 °F ... +176 °F)
Protection class: standard: optional:	 IP65 (plug connector), IP68 (cable) UL Inherent safety Ex II 1G Ex ia IIB T6 (DIN plug) - EXI Ex ia IIC T6 (cable version) - EXI Ex II 1GD Ex ia D 20 T100 UL, Type 4, for indoor and outdoor use

Housing: standard: optional:	 Aluminium diecast 230 Stainless steel 1.4305/SS 304, Version - VA
Process connection:	CETOP flange □40x40 mm, see dimensions
Electrical connection:	see dimensions
Weight: Total: CETOP flange version: Adapter version straight: Adapter version 90° offset: Adapter version X1T compatible:	 400 g (0.88 lbs) 350 g (0.77 lbs) 620 g (1.36 lbs) 675 g (1.48 lbs) 730 g (1.61 lbs)
Micro switch:	Change-over contact (SPDT)
Set screw:	Stainless steel 1.4305/SS304 (SW5)
Approvals:	GL, Ex ia, cULus, further approvals on request

Pressure ranges and proof pressures

Pressure range code		Adjustment range (pressure increasing)		Adjustment range (pressure decreasing)		Max. operating pressure		Proof pressure		Max. hysteresis range end
[bar]	*[psi]*	[bar]	*[psi]*	[bar]	*[psi]*	[bar]	*[psi]*	[bar]	*[psi]*	
		Diaphragm		**Diaphragm**						
1	A	0.6 ... 6.0	*(8.7...87)*	0.4...5.7	*(5.8...82)*	50	*725*	80 *	*(1,200)*	≤15%
2	b	3.0...20.0	*(45.0...250)*	2.0...17.0	*(29...246)*	50	*725*	80 *	*(1,200)*	
3	c	4.0...45.0	*(60.0...650)*	3.0...41.0	*(43...600)*	50	*725*	80 *	*(1,200)*	
		Piston		**Piston**						
4	D	5.0...180	*(75...2,600)*	3.0...160	*(43...2,320)*	250	*3600*	600	*(8,700)*	≤15%
5	E	50.0...350	*(750...5,000)*	30.0...300	*(430...4,300)*	450	*6500*	600	*(8,700)*	
6	F	80.0...600	*(1,200...8,700)*	55.0...520	*(800...7,550)*	600	*8700*	900	*(15,000)*	

* Test pressure 200 bar *(2,900 psi)* upon request, results in less lifetime of the switch.

Index: E
Specifications are subject to changes without notice.

Dimensions (in mm / *inch*)

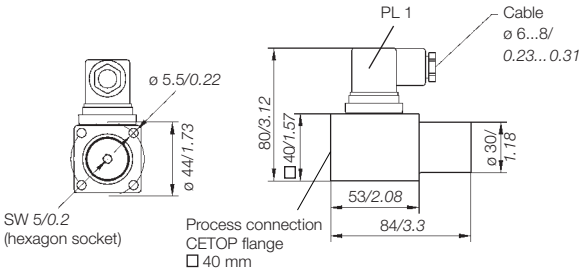

Up to pressure stage 5 or E every pressure switch is supplied with two fastening screws M5×60 mm according to DIN 912 (10.9, galvanized).
The pressure switches of pressure stage 6 or F are supplied with four screws.

Switching- and connection diagram (pressureless)

	PL1	PL2
C	1	1
NC	2	2
NO	3	4
PE	---	3

Electrical connection (PL1 = standard)

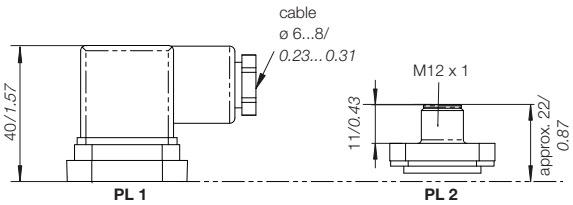

Cube plug DIN EN 175301-803 A (former DIN 43650)

Plug M12x1 mm, 4-pin

Process connections

Complete assembly with pressure switch only upon request

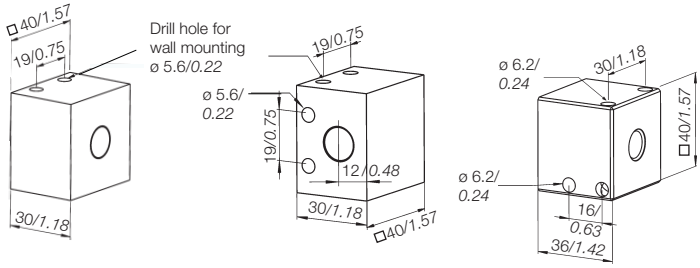

Connecting block **1**, straight version

Connecting block **2**, version 90° offset (optional, only upon request)

Connecting block **3**, compatible with X1T, 96100/96111 (optional, only upon request)

Electrical ratings

Micro switch	Special features	Volt AC 50/60 Hz	Ind. load A	Res. load A	Volt DC	Ind. load A	Res. load A	Minimum capacitance	Intrinsic safety Ex ia
1	Silver contacts	250 V ~ 125 V ~	2.0 3.0	3.0 5.0	30 V= 250 V=	3.0 0.2	4.0 0.2	160 mA at 5 VDC	Umax = 28 V Imax = 50 mA
2	Gold contacts*	125 V ~	---	0.1	30 V =	---	0.1	0.1 mA at 5 VDC	

* e.g. suitable for PLC and/or Ex ia

Seal

	Seal
B	NBR
N	CR
E	EPDM
V	FKM

Options

	Housing
VA	1.4305

Approvals

EXI	Ex ia
GL	Germanischer Lloyd
UL	cULus approval

Ordering

Example for order number

Type	Process connection	Pressure range	Micro switch Contact		Electrical connection		Seal		Options		Approvals
8	**1**	**2**	**1**	–	**PL1**	–	**B**	–	**VA**	–	**GL**

Your order number

8	**1**			–		–		–		–	

Accessories (To be listed separately in case of order. Blocks are slackly arranged.)

Connecting block no.	Order No.	Process connection	Designation	Material
1	906-0953	1/4" NPT female	straight	St passivated
1	906-0954	G 1/4" female	straight	St passivated
1	906-0946	1/4" NPT female	straight	1.4305
1	906-0947	G 1/4" female	straight	1.4305
2	906-0926	G 1/4" female	90° offset	1.4305
2	906-0927	1/4" NPT female	90° offset	1.4305
3	906-0919	G 1/4" female	straight	AlMg4,5Mn0,7

Specifications are subject to changes without notice.

Electronic Pressure Switch

Type UDS1V2

Electronic pressure switch for pressure control with internal stainless steel diaphragm, with 2 solid state outputs or 1 solid state output with adjustable hysteresis.

Features

- Teach & Go
- Compact construction

Measuring ranges

0...10 bar to 0...600 bar

Applecations

OEM applications in hydraulic and pneumatic systems,
press construction,
lubricant monitoring, apparatus engineering,
machine/machine tool industry,
automobile industry, injection molding machines

Technical Data

Sensor element:	Piezoresistive silicon measuring cell
Materials: Wetted parts: Electonics housing: Seals:	 Steel, pass., SS316 PA 6.6 FKM
Operating elements:	2 easy response push bottons
System of protection:	IP65
Protection class:	III
Process connection:	G ¼“ AG Others on request
Dimensions:	approx. Ø 28 x 100 mm (without plug connector)
Measuring ranges:	0…10 bar to 0…600 bar 0…150 to 0…9000 PSI
Electrical connection:	Plug M12x1, 4-pin
Temperature influence:	± 0.2 % f.s./10K
Compensation range:	-10 °C…+70 °C
Repeatability:	+/- 1 % f.s.
Temperature range: Medium: Electronics: Storage:	 -25 °C…+100 °C -25 °C…+80 °C -30 °C…+80 °C
Power supply:	15…32 V DC, reversed polarity protected (SELV, PELV)
Transistor switching outputs PNP: Adjustment range for switching point- and hysteresis*	 0 % …100 % f.s. Max. 100 Hz Max. 200 mA, short-circuit proof

* only 1SP version (2SP version 15% hysteresis)

Index: ---

Subject to technical changes.

Electronic Pressure Switch

Type UDS1V2

Index: ---

Connection diagram

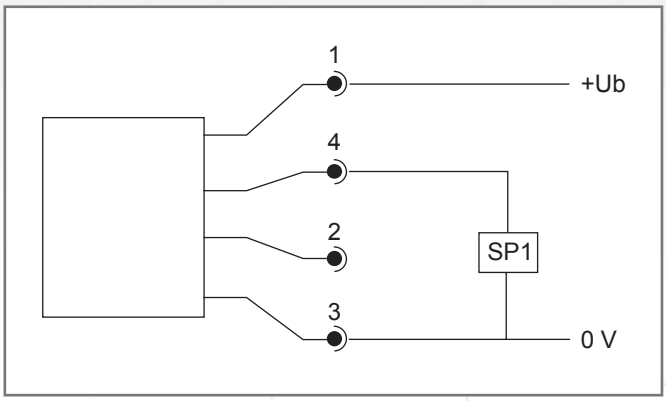

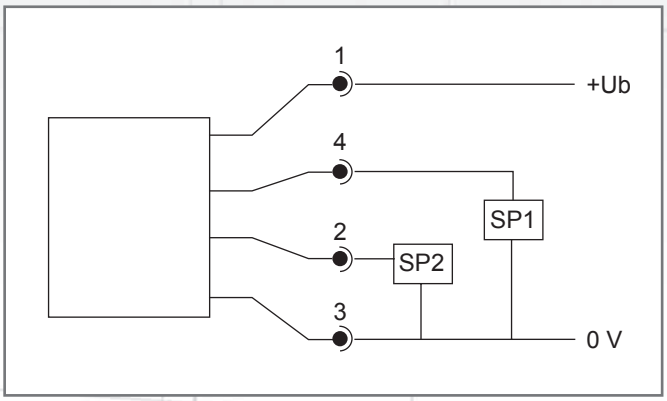

Plug

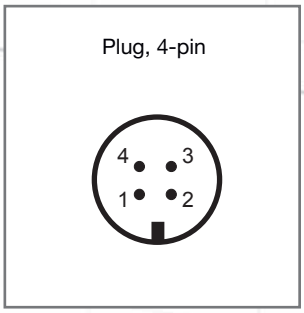

Order Numbers

Pressure range	0...10 bar	0...100 bar	0...400 bar	0...600 bar
1 switching output with adjustable hysteresis	0421-060	0421-061	0421-062	0421-063
2 switching outputs with 15% hysteresis	0421-064	0421-065	0421-066	0421-067

Subject to technical changes.

Accessories

Order Number	Description
907-0357	Plug connector M12x1, 4-pin, with screw terminals, angled
907-0344	Plug connector M12x1, 4-pin, with screw terminals, straight

Electr. Dual Pressure Switch

Type Switch 2000

Electronic pressure switch for pressure control with internal stainless steel diaphragm, digital display, 2 solid state contacts or 1 solid state plus 1 analog output, linearity error 0.5 % f. s.

Features

7-segment LED display, microprocessor controlled, self monitoring with error display
All parameters are configured by keypad, adjustable keypad lock, rugged construction, vibration and shock-proof, long-term stability

Measuring ranges

0...1 bar to 0...600 bar gauge

Applications

OEM applications in hydraulic and pneumatic systems, press construction,
lubricant monitoring, apparatus engineering, machine/machine tool industry, automobile industry, injection molding machines

Technical Data

Sensor element:	Piezoresistive silicon measuring cell
Materials: Wetted parts: Electronics housing: Seals:	 Stainless steel, mat. no. 1.4301 Aluminum die-cast FKM
Operating elements:	3 easy-response pushbuttons
System of protection:	IP65
Protection class:	III
Process connection:	G1/4 M
Dimensions:	36 x 130 mm (without plug connector)
Weight:	approx. 200 g
Measuring ranges [bar]: **Proof pressure [bar]:**	10 / 50 / 100 / 200 / 400 / 600 15 / 75 / 150 / 300 / 600 / 800
Linearity error:	<±0.5 % v. f. s. at +25 °C
A/D converter: Resolution: Scanning rate:	 10 bit (1024 steps per measuring span) 200/s
Electrical connection:	Plug M12 x 1, 4-pin
Temperature influence:	< ±0.2 % v. f. s./10K
Compensation range:	-10 °C... +70 °C
Repeatability:	±0.1 % v. f. s.
Temperature range: Medium: Electronics: Storage:	 -25 °C... +100 °C -10 °C... +70 °C -30 °C... +80 °C

Power supply:	15... 32 V DC, reversed polarity protected (SELV, PELV)
Digital display: Display range: Display rate:	3-digit 7-segment LED display, red, digit height 10 mm -1 ... 999 20/s
Error display:	LED yellow and alphanumeric display
Power consumption:	approx. 50 mA (without load)
Analog output: Current output: Load: Load influence: Scanning rate: Voltage output: Rating: Adjustment range:	 4...20 mA max. Rl = (Ub-12 V)/20 mA Rl = 600 Ohm at Ub = 24 V DC 0.3 %/100 Ohm 5 ms 0...10 V DC max. 10 mA 25 %... 100 % f. s.
Transistor switching outputs PNP: Switching function: Adjustment range for switching point and hysteresis: Switching frequency: Delay Status display(s):	 Normally open/normally closed, standard / window mode and diagnosis function adjustable 0 %... 125 % f. s. max. 100 Hz max. 500 mA, short-circuit proof 0.0 s ... 9.9 s adjustable LED(s) green
Accessories:	Adapter for pressure switch adjustment, damping screw, plug connector
Approvals:	cULus: file no. E42816

Index: A

Specifications are subject to changes without notice.

Electr. Dual Pressure Switch

Type Switch 2000

Dimensions (in mm / *inch*)

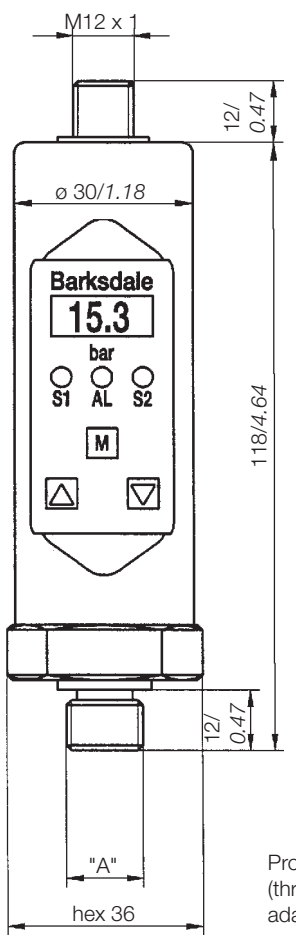

Process connection (thread „A“ without adapter): G 1/4

Connection diagram

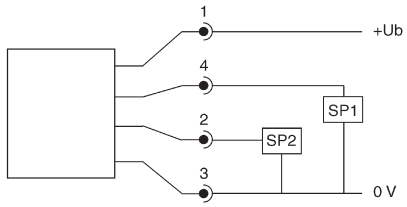

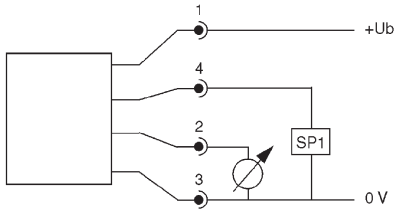

4...20 mA

Plug

Specifications are subject to changes without notice.

Order Numbers

Pressure range	0...10 bar	0...50 bar	0...100 bar	0...200 bar	0...400 bar	0...600 bar
2 switching outputs	0428-017	0428-018	0428-019	0428-020	0428-021	0428-022
1 switching output 1 analog output 4...20 mA	0428-127	0428-128	0428-129	0428-130	0428-131	0428-132

Further measuring ranges on request

Accessories

Order Number	Description
0499-016	Adapter G1/4 IG - G1/4 male thread for optimum alignment of pressure switch
901-0677	Damping screw with 0.2 mm restriction against quick pressure changes and high pulsation rate
907-0357	Plug connector M12 x 1, 4-pin, with screw terminals, angled
907-0344	Plug connector M12 x 1, 4-pin, with screw terminals, straight

Electronic pressure transducer for OEM applications, with internal ceramic sensor, linearity accuracy 0.5 % f. s.

Features

Very compact design,
space-saving,
High shock and vibration stability

Measuring ranges

-1...0 bar to 0...400 bar gauge
0...1 bar 0...16 bar absolute pressure

Applications

OEM applications,
hydraulic and pneumatic systems

Index: B

Technical Data

Sensor element:	Ceramic sensor
Materials: Pressure connection: Housing: Wetted parts: Sensor seal:	 Stainless steel, mat. no. 1.4305 Stainless steel, mat. no. 1.4305 Ceramics Al_2O_3 O ring FKM
System of protection:	IP65
Protection class:	III
Process connection:	G1/4 M
Dimensions:	Ø27 x approx. 58 mm (without plug connector)
Weight:	approx. 145 g
Measuring ranges [bar]: **Proof pressure [bar]:**	-1...0 | 1 | 1.6 | 2.5 | 4 4 | 4 | 4.0 | 4.0 | 10
Measuring ranges [bar]: **Proof pressure [bar]:**	6 | 10 | 16 | 25 | 40 | 60 10 | 20 | 40 | 40 | 100 | 100
Measuring ranges [bar]: **Proof pressure [bar]:**	100 | 160 | 250 | 400 200 | 400 | 400 | 600

Linearity error:	≤ ±0.5 % v. f. s.
Electrical connection:	Plug reversed polarity protected, DIN EN 175 301-803-A (prev. DIN 43650) (Optional: PG7/2 m cable)
Temperature influence:	< ±0.3 % v. f. s./10K
Compensation range:	0 °C... +70 °C
Temperature range: Medium: Electronics: Storage:	 -25 °C... +125 °C -25 °C... +85 °C -40 °C... +125 °C
Output signals:	4... 20 mA/2-wire (Optional: 0... 10 V/3-wire)
Power supply:	12... 36 V DC, reversed polarity protected (SELV, PELV)
Permissible load (Ohm): Current 2-wire: Voltage 3-wire:	 ≤ (Ub-12 V)/20 mA >1 MOhm
Vibration:	10 g/20... 2000 Hz
Shock:	100 g/11 ms

Specifications are subject to changes without notice.

Electronic Pressure Transducers

Type UPA 5

Dimensions (in mm / *inch*)

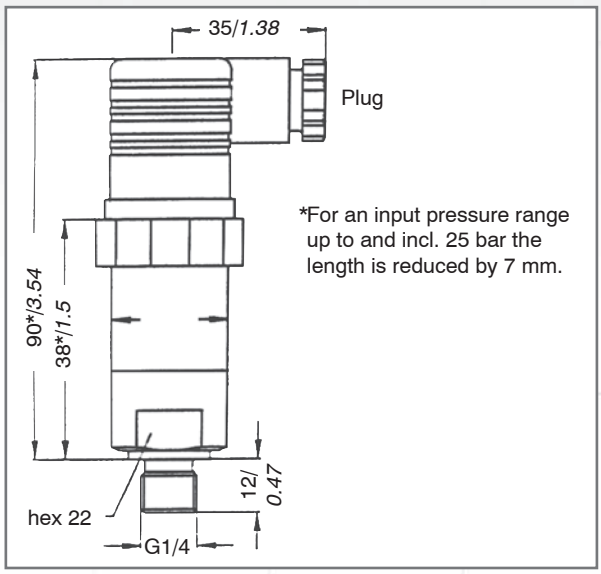

Wiring diagrams

2 wire: 4...20 mA

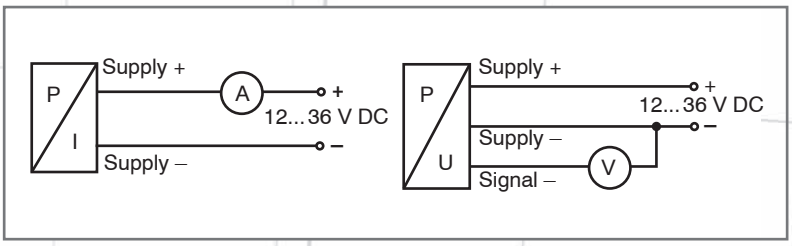

3 wire: 0...10 V

Electrical Connection

	Current output 4...20 mA (2-wire)		Voltage output 0...10 V (3-wire)	
Connection	**Plug (DIN 43650)**	**Cable (DIN 47100)**	**Plug (DIN 43650)**	**Cable (DIN 47100)**
+ Supply	1	white	1	white
- Supply	2	brown	2	brown
+ Signal	---	---	3	green
- Signal	---	---	---	---

Order Numbers

Pressure ranges [bar] relative pressure	Output signal 4...20 mA Plug DIN 43650	Output signal 0...10 V Plug DIN 43650	Output signal 4...20 mA PG7/2 m cable	Output signal 0...10 V PG7/2 m cable
-1...0	0434-002	0434-037	0434-046	0434-061
1	0434-006	0434-027	0434-047	0434-062
1.6	0434-007	0434-028	0434-048	0434-063
2.5	0434-008	0434-029	0434-049	0434-064
4	0434-009	0434-030	0434-050	0434-065
6	0434-010	0434-031	0434-051	0434-066
10	0434-011	0434-032	0434-052	0434-067
16	0434-012	0434-026	0434-053	0434-068
25	0434-024	0434-022	0434-054	0434-069
40	0434-014	0434-033	0434-055	0434-070
60	0434-015	0434-034	0434-056	0434-071
100	0434-003	0434-035	0434-057	0434-072
160	0434-004	0434-023	0434-058	0434-073
250	0434-018	0434-005	0434-059	0434-074
400	0434-001	0434-036	0434-060	0434-075
[bar] absolute pressure				
1	0434-041			
2	0434-040			
4	0434-042			
16	0434-043			

Specifications are subject to changes without notice.

Type UNS1000-BN18

Level- and temperature switch for monitoring hydraulic tanks („Power Packs“).
Modern hydraulic reservoirs have a high specific output volume that can result in high oil temperatures under load. Level-and temperature monitoring is a unrenounceable safety factor for the complete plant.

Index B

Features

For bulkhead unions G1/2“ and M12x1.5
Compact Design

Applications

OEM applications,
Accessories for hydraulic reservoirs,
Mineral oil applications

Technical Data

Materials: Bulkhead union: Contact tube: Float stopper: Float:	 Brass Brass Bronze foamed NBR
System of protection:	IP65
Housing:	---
Process connection: male thread:	 G1/2“ DIN ISO 228-1=T1/2 M20x1.5 DIN 13
Electrical connection:	Plug M12x1, 4-pin, PA Plug DIN EN 175301-803-A (former DIN 43650), 4-pin, PA Cable gland, PA
Electrical values:	max. 24 V AC/DC max. 1 A max. 20 VA/W
Operating temperature:	-10 °C ... +90 °C (14 °F ... 194 °F)

Operating pressure:	max. 4 bar (400 kPa=58 psi)
Density:	min. 0.64 g/cm³
Depth of immersion at density 1:	15 ±2 mm
Temperatur switch: Temperature range: Indexing tolerance: Differential gap: Contact:	bimetal 10 K-steps +60 °C ... +90 °C (140 °F ... 194 °F) ±5 K 30 ±15 K NC (the contact is closed at room temperature)
Dual switch: Switching points: Distance L1-L2: Kind of contact, opt.:	 Standard: 1 float for 1 switching point Dual: 1 float for 2 switching points min. 32 mm acc. to ASAM (L1=Pin 1+2/ L2=Pin 1+4) only with M12x1
Approval:	---

Connection diagram

Optional: Contacts acc. to ASAM

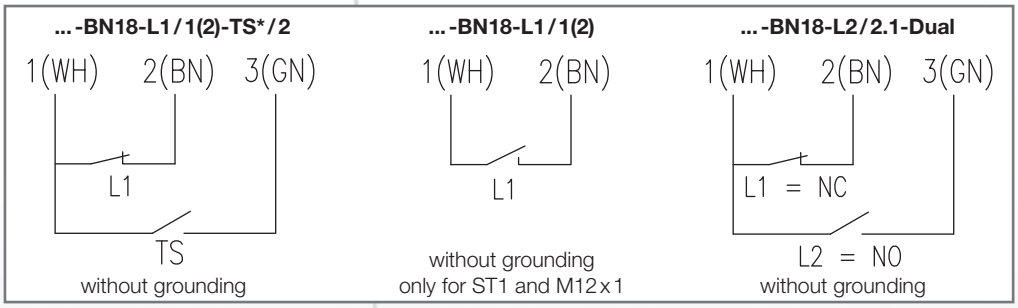

Accessories

Order Number	Description
907-0013	ST1 socket acc. to DIN EN 175 301-803-A (former DIN 43650) with PG9 made from PA
907-0344	M12x1-socket (circular connector, straight) with PG9 made from PA

Specifications are subject to changes without notice.

Dimensions (in mm / *inch*)

* TS: temperature switch
** T1/2: male thread G1/2“
M20x1.5: male thread
*** with TS: min. 40/*1.57*
without TS: min. 25/*0.98*

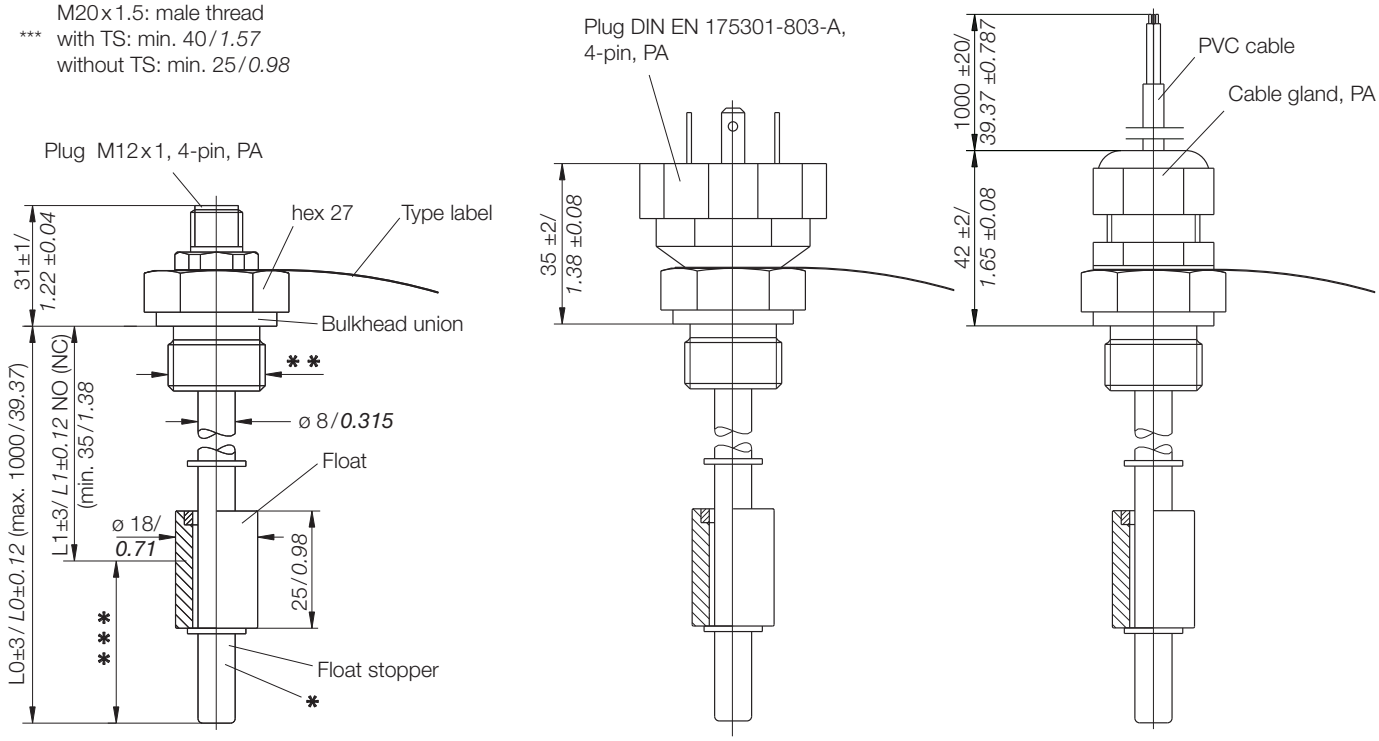

UNS1000-MS/-M12x1-BN18-L1/1(2)-TS*/2** **UNS1000-MS/**-ST1-BN18-L1/1(2)-TS*/2** **UNS1000-MS/**-PG-BN18-L1/1(2)-TS*/2**

Order Numbers

Further lengths and temperature switching points upon request

Order No.	Article description UNS1000-MS/...	Length L_0 [mm]		Article description UNS1000-MS/...	Length L_0 [mm]
0122-172	... M20x1.5-ST1-BN18-L1/1(2)-TS70/2	70 ... 400	0122-190	... T1/2-ST1-BN18-L1/1(2)-TS70/2	70 ... 400
0122-173	... M20x1.5-ST1-BN18-L1/1(2)-TS70/2	401 ... 600	0122-191	... T1/2-ST1-BN18-L1/1(2)-TS70/2	401 ... 600
0122-174	... M20x1.5-M12x1-BN18-L1/1(2)-TS70/2	70 ... 400	0122-192	... T1/2-M12x1-BN18-L1/1(2)-TS70/2	70 ... 400
0122-175	... M20x1.5-M12x1-BN18-L1/1(2)-TS70/2	401 ... 600	0122-193	... T1/2-M12x1-BN18-L1/1(2)-TS70/2	401 ... 600
0122-176	... M20x1.5-PG-BN18-L1/1(2)-TS70/2	70 ... 400	0122-194	... T1/2-PG-BN18-L1/1(2)-TS70/2	70 ... 400
0122-177	... M20x1.5-PG-BN18-L1/1(2)-TS70/2	401 ... 600	0122-195	... T1/2-PG-BN18-L1/1(2)-TS70/2	401 ... 600
0122-178	... M20x1.5-ST1-BN18-L1/1(2)	55 ... 400	0122-196	... T1/2-ST1-BN18-L1/1(2)	55 ... 400
0122-179	... M20x1.5-ST1-BN18-L1/1(2)	401 ... 600	0122-197	... T1/2-ST1-BN18-L1/1(2)	401 ... 600
0122-180	... M20x1.5-M12x1-BN18-L1/1(2)	55 ... 400	0122-198	... T1/2-M12x1-BN18-L1/1(2)	55 ... 400
0122-181	... M20x1.5-M12x1-BN18-L1/1(2)	401 ... 600	0122-199	... T1/2-M12x1-BN18-L1/1(2)	401 ... 600
0122-182	... M20x1.5-PG-BN18-L1/1(2)	55 ... 400	0122-200	... T1/2-PG-BN18-L1/1(2)	55 ... 400
0122-183	... M20x1.5-PG-BN18-L1/1(2)	401 ... 600	0122-201	... T1/2-PG-BN18-L1/1(2)	401 ... 600
0122-184	... M20x1.5-ST1-BN18-L2/2.1-Dual	55 ... 400	0122-202	... T1/2-ST1-BN18-L2/2.1-Dual	55 ... 400
0122-185	... M20x1.5-ST1-BN18-L2/2.1-Dual	401 ... 600	0122-203	... T1/2-ST1-BN18-L2/2.1-Dual	401 ... 600
0122-186	... M20x1.5-M12x1-BN18-L2/2.1-Dual	55 ... 400	0122-204	... T1/2-M12x1-BN18-L2/2.1-Dual	55 ... 400
0122-187	... M20x1.5-M12x1-BN18-L2/2.1-Dual	401 ... 600	0122-205	... T1/2-M12x1-BN18-L2/2.1-Dual	401 ... 600
0122-188	... M20x1.5-PG-BN18-L2/2.1-Dual	55 ... 400	0122-206	... T1/2-PG-BN18-L2/2.1-Dual	55 ... 400
0122-189	... M20x1.5-PG-BN18-L2/2.1-Dual	401 ... 600	0122-207	... T1/2-PG-BN18-L2/2.1-Dual	401 ... 600

Specifications are subject to changes without notice.

Global Presence

Global Presence

Barksdale Inc.
3211 Fruitland Avenue
Los Angeles,
CA-90058-0843
USA
Telefon: +1 (323) 589-6181
Fax: +1 (323) 589-3463
www.barksdale.com

Barksdale GmbH
Dorn-Assenheimer Straße 27
61203 Reichelsheim, Deutschland
Telefon: +49 (0) 6035-949-0 (main office)
+49 (0) 6035-949-204 (sales)
Fax: +49 (0) 6035-949-111/ -113
E-Mail: info@barksdale.de
www.barksdale.de

Specifications are subject to changes without notice. Art.-Nr. 923-1479 Index: B

Barksdale
CONTROL PRODUCTS
CRANE Barksdale, Inc./Barksdale GmbH
A Subsidiary of Crane Co.